Marine Grade Anti-Vibration Mortice Bathroom Privacy Sashlock – 2-11/64” (55mm) backset

K9902-##-1093 (Right Hand)
K9902-##-1094 (Left Hand)

Imperial (inch) drawing

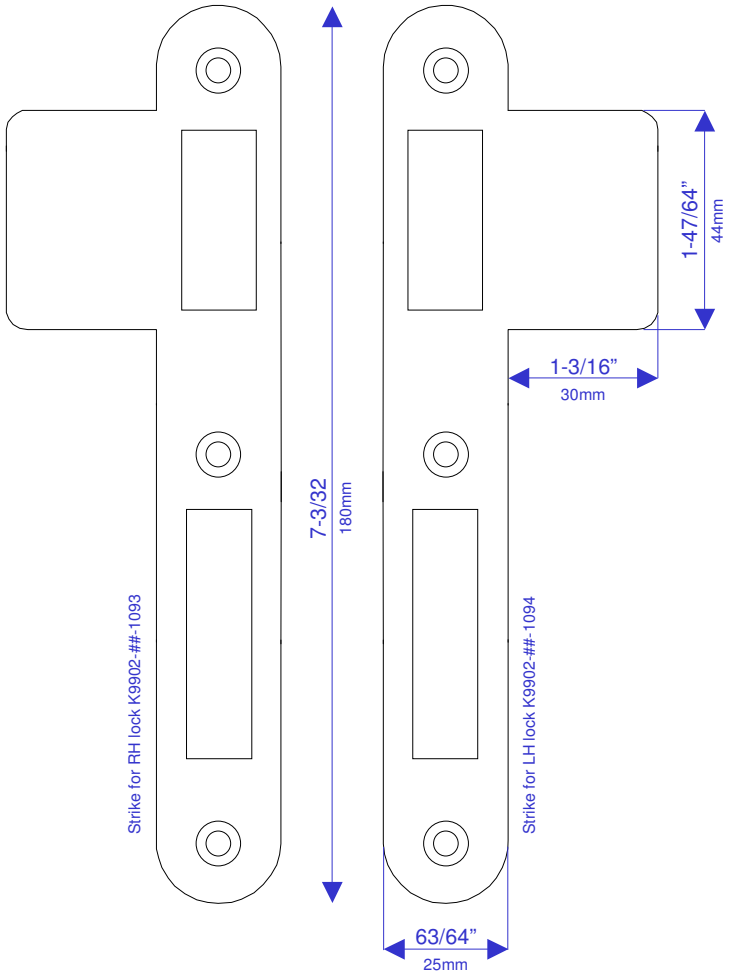

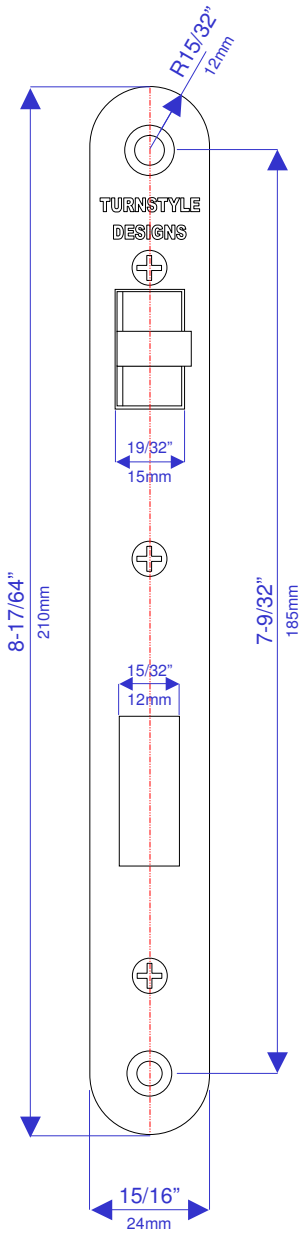

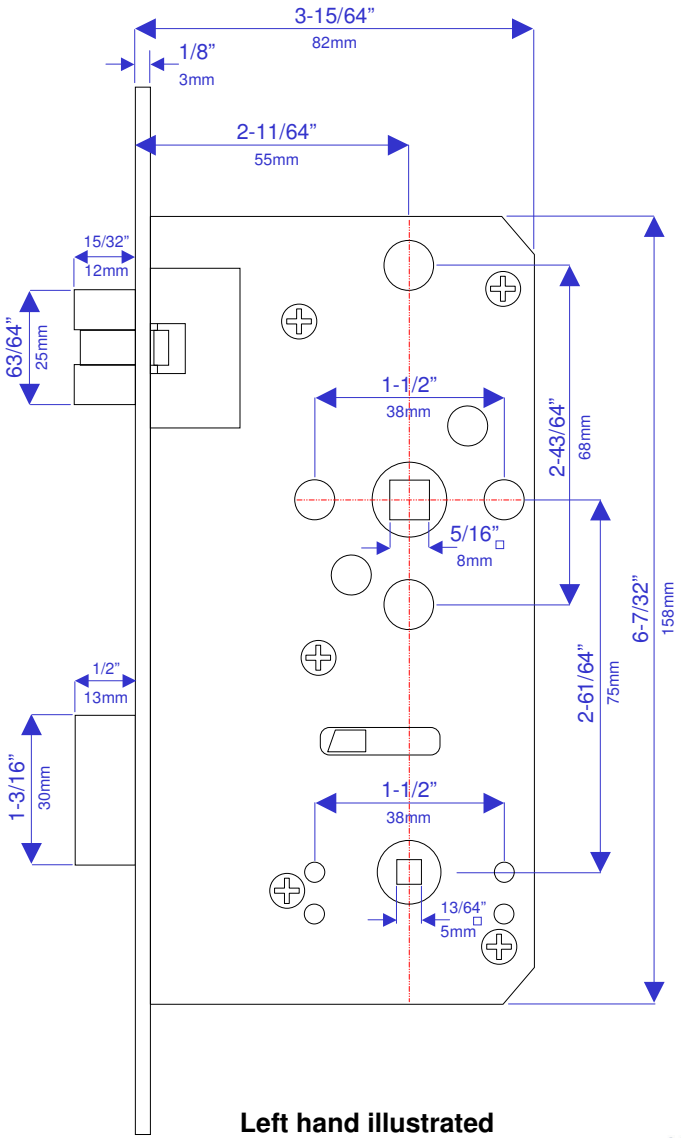

Left hand illustrated

Not to scale

**Imperial sizes converted to nearest 1/64”
from original metric size**

Turnstyle Designs Ltd, Baron Way, Roundswell Business Park, Barnstaple, Devon, EX31 3TB, United Kingdom. Tel : +44 (0)1271 325325 Fax : +44 (0)1271 328248 Email : sales@turnstyledesigns.com Online : www.turnstyledesigns.com